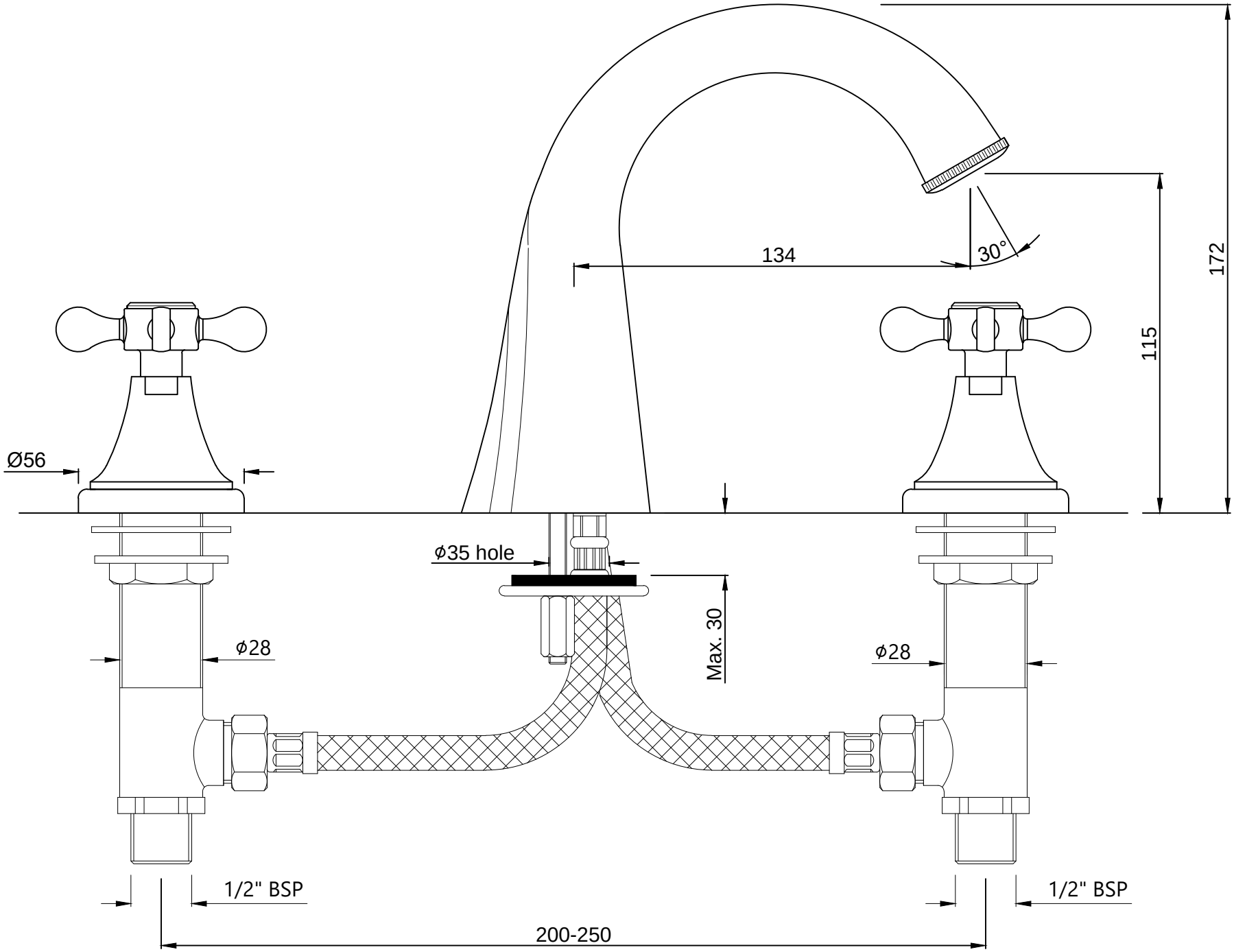3-Hole Basin Mixer without Popup Waste System	Cat. No.-QQP-7189PM